PARTS, SYSTEMS AND AUTOMATIONS FOR FLUID DISPENSING

USE AND MAINTENANCE MANUAL

DYNAMIC MIXER

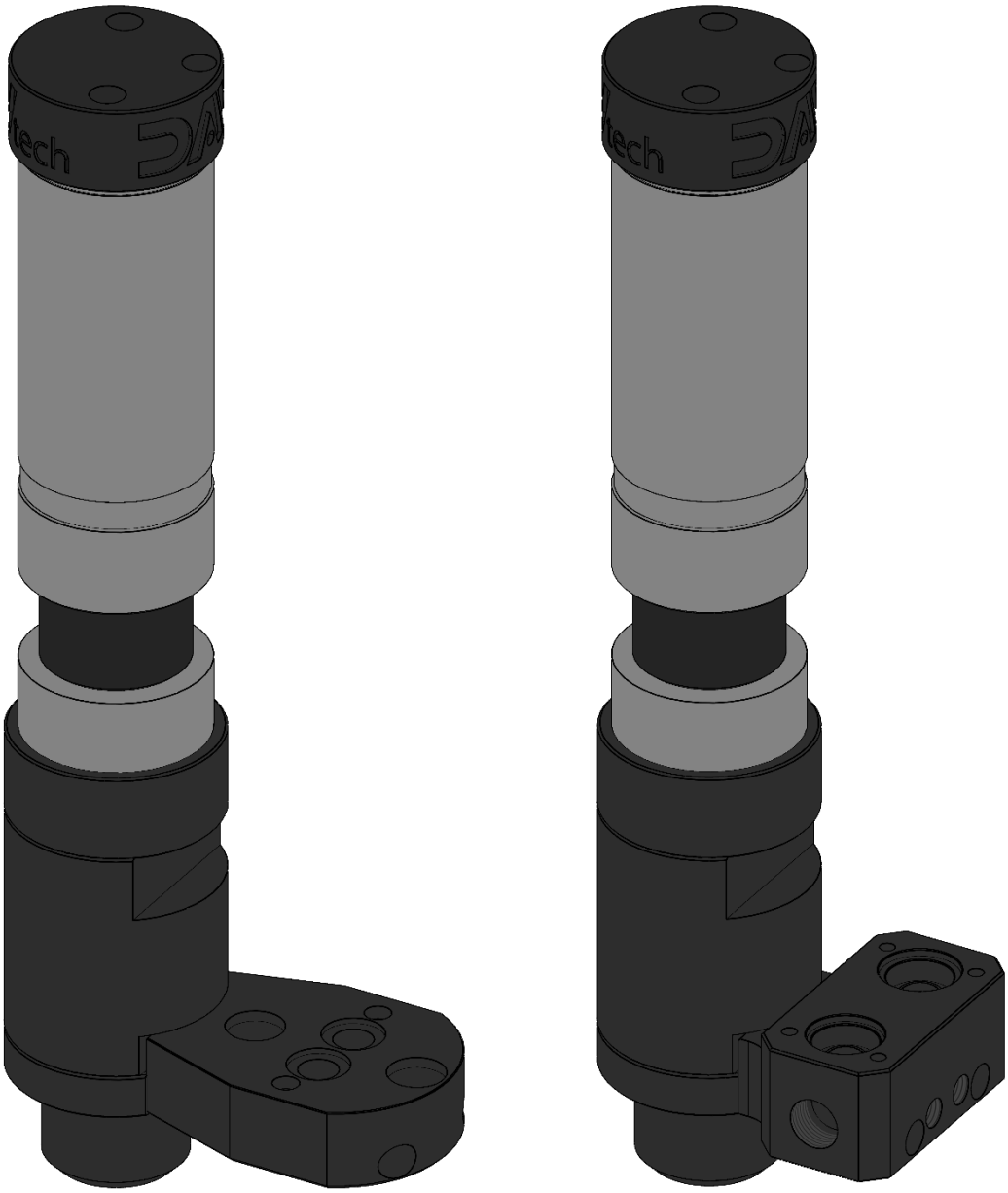

COD.: **DTVI_DYNMIX_2516**
REV.: **03**
DATE: **26/06/2026**

TRANSLATED FROM ORIGINAL
Read carefully before using the component!

EN

TABLE OF CONTENTS

1 GENERAL INFORMATION 1

1.1 SYMBOLOGY 2
1.2 REFERENCE STANDARDS 3
1.3 DECLARATION OF INCORPORATION (ANNEX II B DIR. 2006/42/EC) 4
1.4 GLOSSARY 5
1.5 CUSTOMER SERVICE AND MANUFACTURER CONTACT 6

2 PRESENTATION AND OPERATION 7

2.1 EXPLODED VIEW 9
2.2 TECHNICAL DATA 11

3 SAFETY 13

3.1 COMPONENT SAFETY DEVICES 14
3.2 REQUIRED FREE SPACES 14
3.3 RISK ZONES AND RESIDUAL RISK 14

4 TRANSPORT AND HANDLING 14

5 INSTALLATION 15

5.1 POSITIONING 15
5.2 CONNECTIONS 15
5.2.1 Electrical 16
5.3 COMMISSIONING 17

6 SOFTWARE 17

7 PROCEDURES 17

7.1 DYNAMIC MIXER STARTUP 18
7.2 DYNAMIC MIXER SHUTDOWN 20

8 MAINTENANCE 22

9 TROUBLESHOOTING 24

10 END OF LIFE 24

DAV TECH SRL
Any reproduction (in whole or in part) of this without the manufacturer's permission will be punished according to law.

1 GENERAL INFORMATION

This manual contains information regarding the installation, use, maintenance, and end-of-life of the component and provides guidelines for the most appropriate behavior for correct operation. This manual has been designed to be simple and as immediate as possible, with a subdivision between chapters and sub-chapters that allows finding any desired information quickly. Furthermore, the manual begins by providing a general description of the content, then an overview of the component, leading to safety aspects, transport, installation and use, and finally end-of-life. In case of doubts regarding the interpretation or reading of this document, please contact the manufacturer.

DAV Tech disclaims any responsibility for improper use of the component. Comply with what is specified in this manual.

Read this manual before handling the component or performing any action on it.

The manual constitutes an essential safety requirement and must accompany the component throughout its entire life cycle.

It is the responsibility of the end user to optimize the component's functionality, always considering the purpose for which it was built.

You are asked to keep this manual, together with the attached documentation, in good condition, legible and complete. Furthermore, it must be kept near the component or, in any case, in a place accessible and known to all personnel who use the component itself or who must perform maintenance or inspection interventions. In case the manual deteriorates or is no longer complete, a copy must be requested from the manufacturer, indicating the manual code and revision.

The manual is intended for personnel who use the component (operators), who perform maintenance on it (maintenance technicians), and personnel who must perform checks or inspections. The manufacturer is not responsible for damage to the component caused by personnel who have not followed the instructions contained within the manual itself.

In case of doubts about the correct interpretation of the information contained in this manual, please contact the manufacturer.

WARRANTY

During the design phase, materials and components were carefully selected for implementation in the project and subjected to routine inspection prior to delivery. All elements, from fastening assemblies to control mechanisms, have been engineered and manufactured with an appropriate safety factor to withstand loads exceeding those encountered during normal operating conditions.

For additional notes regarding equipment warranty provisions, please refer to Section 7 of the "GENERAL CONDITIONS OF SALE AND WARRANTY" form issued during either the quotation or order confirmation phase.

DAV TECH SRL
Any reproduction (in whole or in part) of this without the manufacturer's permission will be punished according to law.

1.1 Symbology

Below are the symbols used to give greater impact to the importance of the concept to be conveyed.

ATTENTION!
Refers to a warning that could lead to minor damage (minor injuries, damage to the component requiring maintenance technician intervention).

DANGER!
Refers to a major event that could cause serious damage (death, permanent injuries, irreversible component failure).

NOTE. Indicates relevant information or details.

OBLIGATION. Indicates an activity that must be performed, related to both the component and the manual.

REFERENCE. Refers to an external document that is important to view.

Furthermore, the symbol list is integrated with that of personnel assigned to component use and their function, along with other symbols used within the manual.

Operator
Qualified person capable of operating the component, performing adjustment, cleaning, startup, or restoration operations. The operator is not authorized to perform maintenance.

Mechanical Maintenance Technician
Qualified technician capable of performing mechanical interventions, adjustments, maintenance, and ordinary repairs described in this manual. Not authorized to perform interventions on electrical systems in the presence of voltage.

Electrical Maintenance Technician
Qualified technician capable of performing electrical interventions, adjustments, maintenance, and ordinary repairs described in this manual. Capable of working in the presence of voltage on electrical panels and junction boxes. Not authorized to perform interventions on the mechanical side.

Manufacturer's Technician
Qualified technician made available by the manufacturer to perform complex operations in particular situations, or according to what agreed with the customer.

DAV TECH SRL
Any reproduction (in whole or in part) of this without the manufacturer's permission will be punished according to law.

1.2 Reference standards

The reference regulations and directives of this manual are as follows:

Directives

- 2006/42/EC -- Machinery Directive;
- 2014/30/EU -- EMC Directive (Electromagnetic Compatibility)
- 2014/35/EU -- LV Directive (Low Voltage)

Essential safety and health requirements (ESHRs) of Directive 2006/42/EC, reported in Annex I, paragraph:

- 1.1.2: Principles of safety integration;
- 1.1.3: Materials and products;
- 1.1.5: Machine design for handling purposes;
- 1.1.6: Ergonomics;
- 1.3.4: Risks due to surfaces, edges or angles;
- 1.5.3: Energies other than electrical energy;
- 1.5.4: Assembly errors;
- 1.5.9: Vibrations;
- 1.6.1: Machine maintenance;
- 1.6.4: Operator intervention;
- 1.7.4: Instructions

DAV TECH SRL
Any reproduction (in whole or in part) of this without the manufacturer's permission will be punished according to law.

1.3 Declaration of Incorporation (Annex II B DIR. 2006/42/EC)

Manufacturer Name: **DAV Tech Srl**
Address: Via G. Ravizza, 30, .36075, Montecchio Maggiore (VI)

DECLARES THAT THE PARTLY COMPLETED MACHINERY

Component: DYNMIX
Model: Dynamic mixer
Year: 2025
Intended use: Dynamic mixing system for two-component fluids

COMPLIES WITH THE INCORPORATION PROVISIONS DICTATED BY DIRECTIVE 2006/42/EC

The technical documentation has been prepared in accordance with Annex VII B, as required by the following:

- Machinery Directive 2006/42/EC of the European Parliament and Council of 17 May 2006
- **2014/30/EU**: of the European Parliament and Council of 26 February 2014 on the harmonization of the laws of the Member States relating to electromagnetic compatibility (recast).
- **Directive 2014/35/EU** on the harmonization of the laws of the Member States relating to the making available on the market of electrical equipment designed to be used within certain voltage limits

FURTHER DECLARES THAT:

- The product has been designed and manufactured in accordance with the essential safety and health requirements provided by Directive 2006/42/EC of the European Parliament and Council, of 17 May 2006, relating to machinery, and satisfies all applicable safety regulations indicated in chapter 1.2 of this manual;
- We undertake to transmit, in response to an adequately motivated request from national authorities, relevant information on this partly completed machinery;
- The technical file has been constituted by Andrea Grazioli, via Ravizza, 30, Montecchio Maggiore (VI), IT.

This partly completed machinery cannot be used until the machinery on which it will be used is declared compliant with regulation 2006/42/EC.

Montecchio Maggiore, 16 april 2025

The legal representative

Andrea Grazioli

DAV TECH SRL
Any reproduction (in whole or in part) of this without the manufacturer's permission will be punished according to law.

1.4 Glossary

Below are the terms most commonly used within this manual with their meaning.

TERM	DEFINITION
Enable	Term that defines the act of preparing (enabling) an action. The action will activate as soon as criteria are satisfied which, as a consequence, lead to the activation of the enabled action.
Activate	The action that is performed instantly upon activation of the command.
Hold-to-run commands	Commands defined as those that, used for manual operations, must be kept activated for the action to be performed. When the command is released, the action stops.
Two-hand commands	Hold-to-run commands that require simultaneous activation of two manual commands to perform an action.
P.P.E.	Personal protective equipment. Includes all objects necessary to ensure personnel protection from possible accidental damage (safety shoes, gloves, helmet, and others).
Display	Used to display information. Can be in any shape and size, including touch screen.
Manufacturer	Natural or legal person who designed and manufactured the component object of this manual.
HP	High Pressure. Abbreviation indicating high pressure.
Icon	Small image that symbolically represents a command, function, or even a document or operating program, which appears on a computer screen. When selected by the user, it starts the function or program it symbolizes.
Joystick	Lever manipulator used in control panels.
N.A.	Not Applicable, i.e., indicates that it is a field that does not apply to this particular manual and cannot be integrated into the component.
Operator panel	Control station where machine control instruments are located.
P.I.	Possible Implementation, i.e., currently absent from the component described in this manual, but it is possible to perform an addition and implement it.
Screen	Interface system between man and component. Screen images displayed on the operator panel that allow the user to receive and provide information to the management software are defined as screens.
Control panel	Composition of buttons and selectors that allow direct action on component behavior.
Keyboard	Keyboard only (standalone element) or in addition to a display (keys only, no selectors or other)
Touch screen	Touch screen that allows the user to interact with a graphical interface using fingers or special objects.

DAV TECH SRL
Any reproduction (in whole or in part) of this without the manufacturer's permission will be punished according to law.

1.5 Customer Service and Manufacturer Contact

For any reason concerning use, maintenance, or spare parts requests, the customer must contact the manufacturer directly (or the service center if present), specifying the component identification data.

The customer can use the commercial technical support of area agents or importers, who are in direct contact with DAV Tech Srl.

Company name	**DAV Tech Srl**
Postal address	Via Ravizza, 30, 37065, Montecchio Maggiore (VI) – (IT)
Telephone	+39 0444 574510
Fax	+39 0444 574324
e-mail	davtech@davtech.it
Website	www.davtech.it

DAV TECH SRL
Any reproduction (in whole or in part) of this without the manufacturer's permission will be punished according to law.

2 PRESENTATION AND OPERATION

This manual presents the dynamic mixer, a component that functions to mix two-component fluids so that, when dispensed, the fluid is properly mixed. This component requires the use of a two-component valve or pump, connected through a specific manifold, and a dedicated mixer that has the central element connected to a specific hook, which is rotated by an electric motor.

In other words, the function of this component is:

MIXING OF TWO-COMPONENT FLUIDS

The intended use is considered to be that described in the chapter below, while improper use is considered any other use not described within this manual, with products of material and format different from those for which it was built.

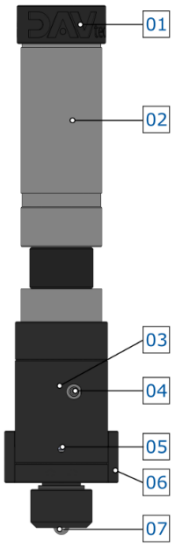

Figure 01 – DYNMIX Detail

No.	DESCRIPTION
01	Closing cap
02	Electric motor
03	Seal area
04	Joint mounting hole
05	Lubrication hole
06	Manifold
07	Mixer hook

Before using a specific type of fluid, it must be verified that:

- The fluid viscosity is compatible with the component characteristics;
- The fluid characteristics satisfy the desired requirements;
- The fluid technical data sheet provided by the manufacturer contains all information regarding the product such as viscosity, applications, drying and storage times;
- The fluid storage time has not been exceeded;
- The fluid packages are hermetically sealed.

In case it is necessary to use multiple fluids with the same system, thorough cleaning must be performed to prevent residues from previous processing from affecting the processing to be performed.

SPECIAL VERSIONS

This component can be connected to either a progressive cavity pump (PCP) or a two-component dosing valve (DA-2K), based on the dosing characteristics desired (quantity, flow rate, fluid type).

DAV TECH SRL
Any reproduction (in whole or in part) of this without the manufacturer's permission will be punished according to law.

OPERATION

This component features a 24 VDC electric motor that, once powered, rotates an elastic coupling that rotates a transmission shaft and, finally, a hook. This hook is connected to the internal element of the mixer (which, based on fluid characteristics and dosing requirements, comes in various models), which by rotating allows optimal mixing of the two-component fluid. The fluid enters through dedicated holes (separated for the two fluids) and continues separately until the beginning of the mixer, where they are then combined.

The component cannot operate autonomously. For it to dispense product, it must be connected to a two-component valve (or pump), which must be connected to a supply system.

ATTENTION!
It is recommended to connect the system to the sources indicated in this manual in chapter 2.2. Connecting it to other sources or products with characteristics not indicated in this manual could damage them.

USEFUL TIPS

P.I.

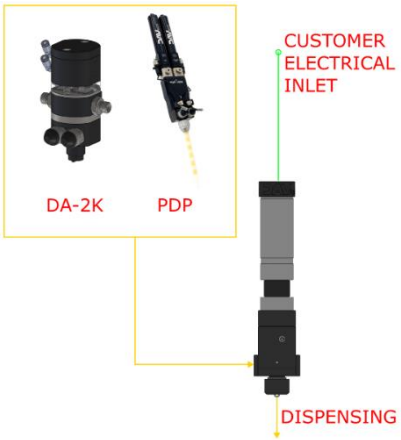

YELLOW	Product
RED	Notes
GREEN	Electrical

Figure 02 – Connection Example

DAV TECH SRL
Any reproduction (in whole or in part) of this without the manufacturer's permission will be punished according to law.

2.1 Exploded View

Below is a list of the main valve components with spare part codes.

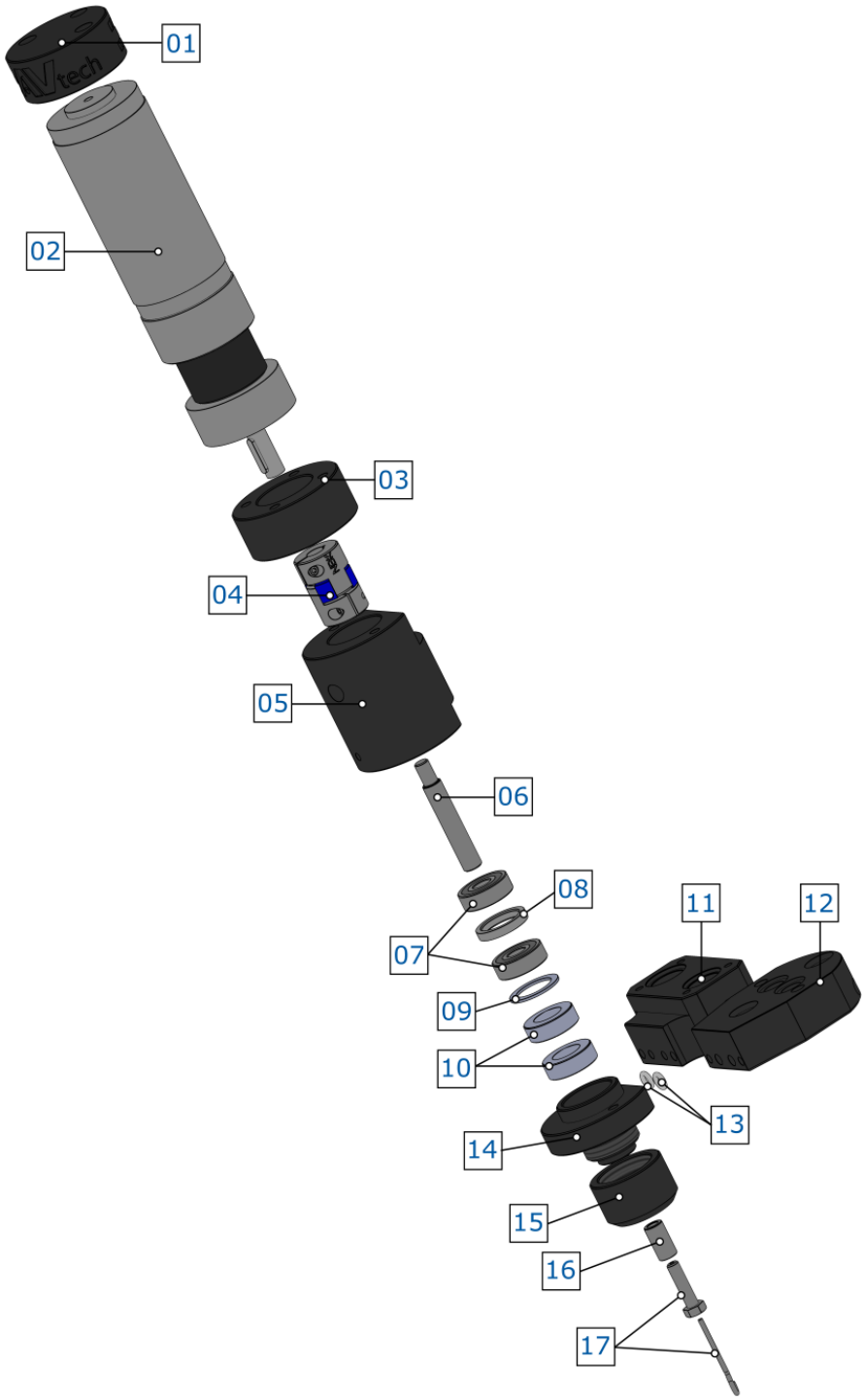

DAV TECH SRL
Any reproduction (in whole or in part) of this without the manufacturer's permission will be punished according to law.

No.	Description	Var.	Code	Variant Details
01	GEARMOTOR COVER	-	DYMD001	-
02	24V EPICYCLIC GEARMOTOR	-	DYMF002	-
03	ELECTRIC MOTOR FLANGE	-	DYMD003	-
04	ELASTIC COUPLING	-	DYMF004	-
05	TRANSMISSION BELL	-	DYMD005	-
06	TRANSMISSION SHAFT	-	DYMD006	-
07	BEARINGS	-	DYMF007	-
08	SPACER	-	DYMF008	-
09	1MM SHIM	-	DYMF009	-
10	LIP SEALS	-	DYMF010	-
11	PCP DYNAMIC MIXER MANIFOLD	-	DYMD011	-
12	DA-2K DYNAMIC MIXER MANIFOLD	-	DYMD012	-
13	PTFE O-RING (2)	-	DYMF013	-
14	MIXER CENTERING DEVICE (3)	-	DYMD014	-
15	RING NUT	-	DYMD015	-
16	EXTENSION	-	DYMF016	-
17	HOOK CONNECTION + TRANSMISSION HOOK (1)	-	DYMD017	-

(1) These two components are indicated separately because they arrive to the manufacturer in this state, but for customer purposes they must be considered as united; in fact, the code is unique;
(2) In case these o-rings are disassembled (or the components that hold them are opened), they must be replaced since they no longer provide sealing;
(3) Together with this component, an M3 grub screw is provided which, based on the fluid viscosity, must be screwed inside the hardening hole to reduce its section and have a more fluid passage.

DAV TECH SRL
Any reproduction (in whole or in part) of this without the manufacturer's permission will be punished according to law.

2.2 Technical Data

Below are all the technical characteristics regarding the component of this manual.

TECHNICAL CHARACTERISTICS		
Description	**UoM**	**Values**
Actuation	\	Electric
Power supply	VDC	24
Rated current	A	2.45
Starting current consumption	A	23.6
Continuous output torque	Nm	3
Rated motor speed	rpm	2000
Materials in contact with fluid		Aluminum
		Stainless steel
		FKM
		PTFE

ENVIRONMENTAL CHARACTERISTICS		
Description	**UoM**	**Values**
Operating ambient temperature	°C	-30 ÷ 120
Storage ambient temperature	°C	-20 ÷ 55
Allowed non-condensing humidity	%	5 ÷ 90

USABLE FLUIDS
Two-component fluids

USABLE VALVES
DA-2K
PDP

DAV TECH SRL
Any reproduction (in whole or in part) of this without the manufacturer's permission will be punished according to law.

DIMENSIONAL AND WEIGHT CHARACTERISTICS		
Description	**UoM**	**Value**
Component length (min ÷ max)	mm	83 (PDP) ÷ 106 (DA-2K)
Component depth (min ÷ max)	mm	59
Component height (min ÷ max)	mm	276
Component weight	kg	1.3

Component

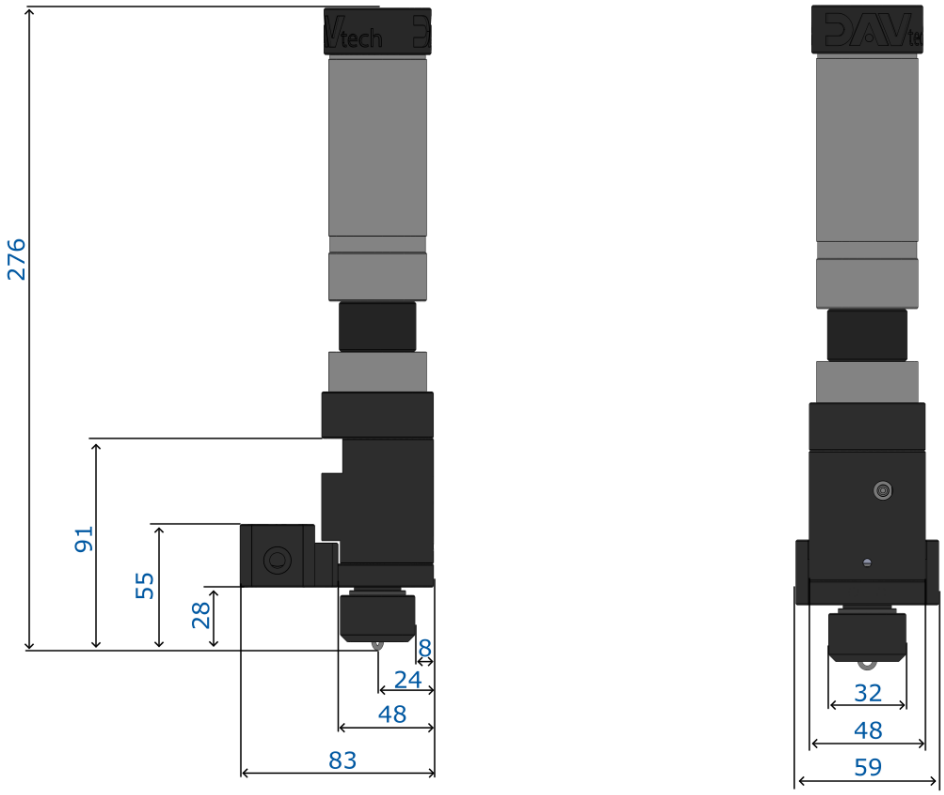

It is possible to request the 3D model of the component in the desired version from the manufacturer without any commitment.

DAV TECH SRL
Any reproduction (in whole or in part) of this without the manufacturer's permission will be punished according to law.

3 SAFETY

Below is the list of warnings regarding the component object of this manual. Please read carefully before proceeding with the next chapters.

DANGER!
Before putting the component into operation or performing any action on it, carefully read this manual.

DANGER!
Do not use the component under the influence of drugs or other substances that may alter attention and reaction capacity.

DANGER!
Operators must perform only operations or interventions that are within the competence of their assigned role and qualification.

FIRE/EXPLOSION HAZARD!
This component is not designed to work in ATEX environments.

DANGER!
Pay close attention during component maintenance, especially when disassembling components that have pressurized springs inside.

ATTENTION!
Modifications to the component must not be made to obtain performances different from those for which it was designed and built, unless authorized by the manufacturer.

ATTENTION!
Avoid introducing foreign bodies into the pneumatic system, even small ones, which could cause system malfunction and compromise machine safety.

The component can only be used by trained and authorized operators and only for the purpose for which it was designed and built.

The component is built in compliance with safety technical standards in force at the time of its construction.

DAV TECH SRL
Any reproduction (in whole or in part) of this without the manufacturer's permission will be punished according to law.

3.1 Component Safety Devices

N.A.

3.2 Required Free Spaces

N.A.

3.3 Risk Zones and Residual Risk

The component has the following residual risks:

- **Electrical energy hazards:** the passage of pressurized fluid generates static electricity which, if touched by personnel not properly isolated, can be dangerous;
- **Hazards due to inhalation of dangerous vapors:** The component is not designed to provide isolation from any toxic and/or dangerous vapors; personnel operating with this device must keep this in mind during its use;
- **Fire hazard due to vapors:** Personnel operating near this component must absolutely not have heat sources that could start a fire;
- **Risk due to pressurized fluid projection:** Due to incorrect component maintenance, it can lead to the ejection of some parts of the same and consequent fluid ejection.

4 TRANSPORT AND HANDLING

Once the goods are received, it must be verified that the packaging is intact and that there is exact correspondence with the ordered material.

ATTENTION!
The original configuration of the component must not be modified. The manufacturer is not responsible for damage caused by inappropriate use of the component.

ATTENTION!
If the packaging is not intact, immediately contact the manufacturer, also sending photos of the packaging condition. Do not open it before notifying the manufacturer.

DAV TECH SRL
Any reproduction (in whole or in part) of this without the manufacturer's permission will be punished according to law.

5 INSTALLATION

Component installation is performed by the customer. If necessary, they can contact the manufacturer to have a specialized technician assist them.

This component has been designed to be installed on a DA-2K valve or on a PCP, which are in turn fixed on the support. It therefore does not have direct fixing to the support. However, the following describes how to perform component fixing to the valve or pump.

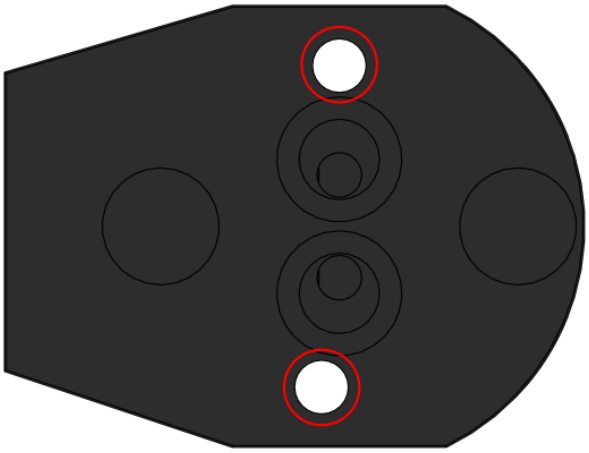

DA-2K
2 screws M5X20

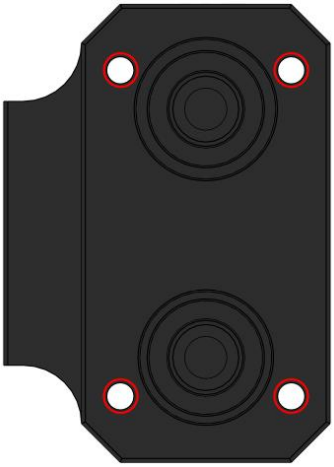

PDP
4 screws M3X40

It is recommended to perform a component check before starting installation. If it shows obvious damage, please contact the manufacturer.

ATTENTION!
Please remove packaging with maximum care. In case damage is caused to the component, the manufacturer is not responsible.

Perform packaging disposal correctly, considering the different nature of components and following current country regulations.

5.1 Positioning

N.A.

5.2 Connections

This chapter explains the connection method to be used for the component. The following types of connections are provided:

- Electrical connection;

DAV TECH SRL
Any reproduction (in whole or in part) of this without the manufacturer's permission will be punished according to law.

5.2.1 Electrical

Authorized personnel		**PPE to wear**					
Component status	Component installed in working position							
Power values	See chapter 2.2							
Required preparations	Position for power supply to PLC, or installed controller							
Required material	N.A.							
Required equipment	N.A.							

Electrical connection is the customer's responsibility.

CONNECTION CHARACTERISTICS	
Cable color	**Use**
BROWN	Not connected
BLUE	0VDC power supply
BLACK	24VDC power supply

CONNECTOR PIN DETAIL

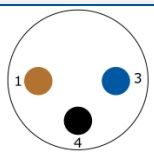

DANGER!
Pay attention to DC wiring, as reversing the cables will damage the component, potentially causing permanent damage and even risk of fire.

ATTENTION!
Please work in the absence of voltage when performing wiring.

CONTROLLER CONNECTION

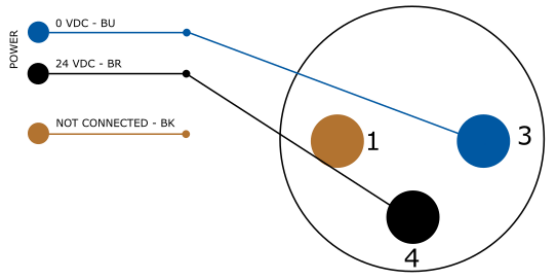

PLC CONNECTION

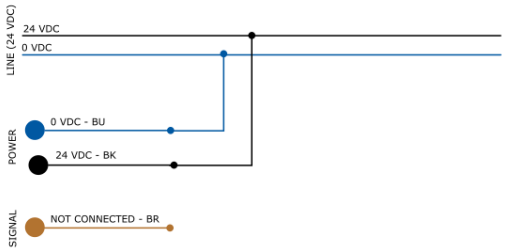

DAV TECH SRL
Any reproduction (in whole or in part) of this without the manufacturer's permission will be punished according to law.

5.3 Commissioning

Component commissioning is performed once positioning and connection operations are completed. Before performing component commissioning, the following checks must be performed:

- Verify that connections have been made correctly;
- Verify that the component is free of dirt or various residues;
- Verify that the dosing system is securely connected to the component;

ATTENTION!
If even just one of the points listed above is not compliant, commissioning must not proceed. Commissioning should only proceed when all points are successfully completed.

6 SOFTWARE

N.A.

7 PROCEDURES

This chapter explains the main procedures that can be used on the component object of this manual. Specifically, it explains in detail:

- How to perform dynamic mixer startup;
- How to perform dynamic mixer shutdown.

DAV TECH SRL
Any reproduction (in whole or in part) of this without the manufacturer's permission will be punished according to law.

7.1 Dynamic Mixer Startup

Before proceeding with the use of this component, it is necessary to follow the steps listed below.

ATTENTION!
Proceeding with component startup without following the steps below risks damaging the component itself or breaking it, or having dosing that is not optimal, for which the manufacturer assumes no responsibility.

01

Ensure that the dynamic mixer is deactivated, or in any case secured so that it cannot start accidentally

02

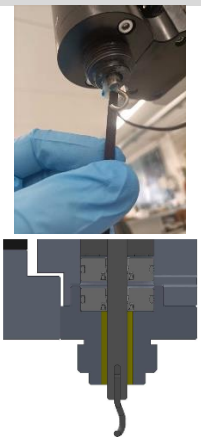

Remove grease from the conduits indicated in yellow in the adjacent figure using a non-invasive tool, such as a cable tie.

03

Set and execute the "STARTUP" recipe to purge residual grease making sure not to rotate the dynamic mixer

ATTENTION!
If the component were integrated on machinery designed by a third party or by the customer, the recipe name could be different.

04

Mount the mixer by first inserting the impeller on the hook and, subsequently, insert the external body of the mixer and then screw the fixing ring nut

DAV TECH SRL
Any reproduction (in whole or in part) of this without the manufacturer's permission will be punished according to law.

05

Set the "MIXER FILLING" recipe and dose until the mixer is completely filled, checking that there are no air bubbles and that the dynamic mixer is not rotating

ATTENTION!
If the component were integrated on machinery designed by a third party or by the customer, the recipe name could be different.

06

Turn on the mixer and perform another filling to mix the product inside the mixer

During the first dosing operations it is possible that grease may leak from the lubrication hole. This is due to the grease injected during shutdown that expands due to thermal expansion. This phenomenon does not compromise system performance.

From this moment, the system is ready to work until shutdown. In case the system needs to be shut down, the following procedure must be followed (chapter 7.2) and then repeat this procedure when resuming work activity.

DAV TECH SRL
Any reproduction (in whole or in part) of this without the manufacturer's permission will be punished according to law.

7.2 Dynamic Mixer Shutdown

This procedure is used when the dynamic mixer or the system to which it is connected needs to be shut down.

ATTENTION!
Proceeding with component startup without following the steps below risks damaging the component itself or breaking it, or having dosing that is not optimal, for which the manufacturer assumes no responsibility.

01

Turn off the dynamic mixer and remove the mixer, then unscrew the mixer body from the fixing ring nut and remove the impeller from the hook.

02

Call up the "SHUTDOWN" recipe to purge the resin conduit of partially mixed product.

ATTENTION!
If the component were integrated on machinery designed by a third party or by the customer, the recipe name could be different.

03

Carefully clean the resin outlet taking care not to contaminate the hardener outlet hole, indicated with a red circle

04

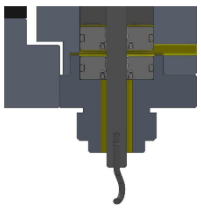

Fill the chamber between the seals (indicated in yellow in the adjacent figure) with grease to ensure shaft cleanliness from any contaminated product. Pressurize it with a pump until grease comes out of the resin conduit.

ATTENTION!
This step serves to prevent bleeding and not damage the seal.

DAV TECH SRL
Any reproduction (in whole or in part) of this without the manufacturer's permission will be punished according to law.

05

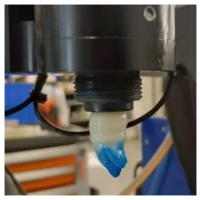

Continue pumping grease until uncontaminated grease is visible on the resin outlet conduit.

It is possible that traces of resin may remain on the rear side since the "grease cushion" touches the resin outlet hole, as shown in the attached image.

Once this last step is performed, the system is safe. To proceed with system startup, follow the instructions in chapter 7.1

DAV TECH SRL
Any reproduction (in whole or in part) of this without the manufacturer's permission will be punished according to law.

8 MAINTENANCE

Maintenance interventions are all those activities to be performed on the component that, if performed correctly, allow it to have a longer life. In general, maintenance is divided into two groups:

- **Ordinary maintenance**, which are interventions at regular intervals or that can be performed by the Customer's personnel, are the most important activities as they allow maintaining the component in good working conditions;

ATTENTION!
Ordinary maintenance interventions must be performed with the methods and timing indicated in the following chapters.

- **Extraordinary maintenance**, i.e., all those interventions that are not at regular intervals or that have not been foreseen, or interventions that cannot be performed by the Customer. They can also result from the lack of ordinary maintenance interventions.

ATTENTION!
Extraordinary maintenance interventions must be performed together with the manufacturer's specialized technicians.

Regarding frequency, it should be considered that:

- **When necessary:** Operation to be performed when the need to perform it is seen;
- **Every machine startup or end of work:** Indicates a daily time period, in general. This can imply every 24 hours (therefore at the beginning of shift every day, or end of shift every day), or even more frequently, based on applications;
- **Long pause:** Indicates a time period greater than approximately one hour;
- **Every drum change:** Indicates every time the supply system is changed (tank, drum, cartridge, or other);
- **Every mixer disassembly:** Indicates that every time mixer replacement is performed, a specific operation must be performed;
- **Weekly:** Indicates a time span equal to seven calendar days;
- **Monthly:** Indicates a time span equal to one calendar month;
- **Semi-annual:** Indicates a time span equal to six calendar months;
- **Annual:** Indicates a time span equal to one calendar year.

ATTENTION!
The times indicated below are indicative as they depend on how the component is used. Follow variations suggested by technicians.

DAV TECH SRL
Any reproduction (in whole or in part) of this without the manufacturer's permission will be punished according to law.

Technician	Description	Frequency [1]	Chapter
	Fluid system check	Every machine startup or end of work	\
	Perform superficial cleaning of dosing system	Every machine startup or end of work	\
	Mixer cleaning and/or replacement	Every end of work	\
	Lip seal replacement (No.10 chap 2.1)	Semi-annual	\
	Bearing replacement (No.07 chap. 2.1) [2]	Annual	\

[1] This data may vary based on the type of fluid used and the usage cycle of the dosing system itself.
[2] In case of leakage, component revision must be performed in short time. Times depend on application to application, ask the manufacturer for an estimate for your specific case.

ATTENTION!
For dosing system cleaning use only soft brushes or cotton cloths.

DAV TECH SRL
Any reproduction (in whole or in part) of this without the manufacturer's permission will be punished according to law.

9 TROUBLESHOOTING

This chapter addresses the most common problems that could arise when using the component of this manual.

ATTENTION!
Once the operator has found a problem or suspects there is a problem, they must call the technician responsible for maintenance. Maintenance must always be performed by a specialized and qualified technician.

DEFECT	CAUSE	SOLUTION
Little or no fluid output	Dosing system malfunction	Consult dosing system manual
	Fluid solidified in dispensing section	Manifold cleaning
Nozzle does not rotate or rotates slowly	Motor not connected correctly	Check motor wiring
	Fluid solidified on hook	Clean fluid outlet area
Fluid leakage from inspection hole	Worn seals	Perform component revision
Component moves during dosing	Valve or pump fixing screws not tightened correctly	Check that screws have been positioned correctly and properly tightened
Fluid leak from manifold (between valve and manifold)	Worn o-rings	Replace o-rings
Fluid leak from manifold (between manifold and component)	Worn o-rings	Replace o-rings

10 END OF LIFE

End of life refers to all those activities that put the component out of service. End of life activities can be:

- **Storage**, i.e., when the component is temporarily placed in the warehouse for future use;
- **Stocking**, i.e., when the component is placed in the warehouse for an unspecified period waiting for a third party to buy the component;
- **Dismantling**, i.e., when the component has reached the end of working period, whether due to age, obsolescence, or faults that cannot be repaired, or that can be repaired but it is more convenient to buy a new component.

If installation is not planned in the short term, the component can remain packaged and must be placed in a sheltered and preferably closed place. The ambient temperatures to be respected are reported in chapter 2.2.

Instead, for dismantling and consequent scrapping of the component or its parts, the different nature of the various components must be taken into account and differentiated scrapping must be performed. It is recommended to entrust specialized companies for this purpose and current laws on waste disposal must always be observed.

DAV TECH SRL
Any reproduction (in whole or in part) of this without the manufacturer's permission will be punished according to law.