Installation and maintenance guide

DISPENSING VALVE **DAV 300 - DAV 400**

DAV TECH SRL
Via Ravizza, 30 - 36075 Montecchio Maggiore (VI) - ITALY
Tel. 0039 0444 574510 - Fax 0039 0444 574324

davtech@davtech.it - www.davtech.it

Index

1 INTRODUCTION

1.1 The manual

The user guide is the document that accompanies the valve from the time of its construction and throughout the period of use, it is therefore an integral part of the valve. It requires reading the manual before taking any action involving the valve. The manual must be readily available for use by staff and maintenance of the valve. The user and the attendant use are required to know the contents of this manual.

Reproduction of any part of this manual, in any form, without the express written permission of DAV Tech. The text and illustrations in this manual are not binding, the DAV tech reserves the right, at any time and without notice, the right to make any changes to improve the product or for reasons of character manufacturing or commercial.

1.2 Warranty

The warranty is valid for a period of 12 months from the date of commissioning and no later than 15 months from the date delivery. The interventions carried out during the warranty period does not extend in any way the validity period of the guarantee. The seller is not liable for defects caused by normal wear of parts which by their nature are subject to wear.

1.3 Goods receiving

The original configuration of the valve must never be changed.
Upon receipt of the goods, check that:
- The packaging is intact
- The exact correspondence of the material ordered.

2 TECHNICAL DESCRIPTION

2.1 Valve operation

The dispensing valves DAV 300 - DAV 400 are pneumatically drived components, designed for accurate dispensing of lubricants at low, medium or high viscosity.
The exchange of the compressed air, at a pressure equal to or greater than 6 bar, will result in the emptying of the volumetric chamber and the relative dispensing of a quantity of fluid constant and adjustable.

2.2 Technical specification

Model	DAV 300 - DAV 400
Operation mode	Double Acting
Weight	730 g
Fluid pressure inlet	Min 20 bar - Max 200 bar
Quantity dispensable	DAV 300: 0,1 - 2,0 cm^3 - DAV 400: 1,0 - 6,0 cm^3
Actuating air pressure	5 - 7 bar
Inlet air	M3 fittings for ø 4mm hose
Inlet fluid thread	1/4 gas
Outlet fluid	1/8 gas
Speed	Up to 60 cycles/min
Adjusting the amount dosed	Micrometric with block screw
Used materials	Stainless steel, anodized aluminum
Fluids to be dispensed	Greases and lubricants up to NLGI 3-1.000.000 mPa s

2.3 Connection diagram

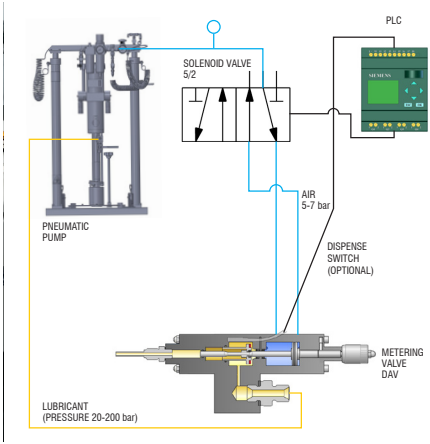

3 INSTALLATION

3.1 Mounting the valve on the machine

The valves can be mounted using volumetric ie threaded holes on his body, close to the junction input lurbificante.
Download 3D models of the valve from our web-site for design brackets, fasteners, and check the dimensions.

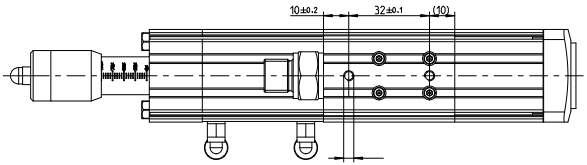

3.2 Drive the valve

The valves DAV 300 and DAV 400 operate double acting by a solenoid valve 5/2 external.

3.3 Connection of the fluid

The valve must be connected to a power supply, such as a pneumatic pump, which ensures a pressure between 20 and 200 bar. A flexible tube, high pressure resistant, must be connected to the connector in place smaller part of the valve.

3.4 Adjusting the amount of material

The amount of product is dispensable functional to fill volume of the room, set by turning the adjustment, mounted on valve head displacement.
A grain then allows you to lock the adjustment and prevent tampering.

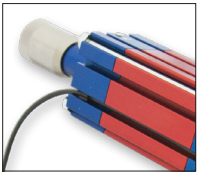

3.5 Quantity dispensable

Being valves volumetric quantity is dispensable only functional to the volume of the chamber set.
In any case it is necessary consider the minimum time required for charging and discharging of the valve, the times that vary with the pressure of the incoming fluid, its viscosity, and depending on the type of applicator connected to the nozzle valve.

4 MAINTENANCE

4.1 General rules

The valves DAV 300 and DAV 400, thanks to construction methods and materials used are easy to maintain.
Minimal maintenance, simple, accurate and allow a steady long-term operation and regular time of the valve, maintaining unchanged performance.

4.2 Valve disassembly

Before disassembling the valve:

1) Clean the outside
2) Release the pressure from the system
3) Disconnect the power supply of lubricant to the valve
4) Key 4mm remove the 4 tie rods present in the head and foot valve
5) Remove various aluminum bodies
6) Remove the needle and the volumetric chamber
7) If necessary, unscrew the air piston needle from the spool.

4.3 Valve reassembly

After it has been cleaned thoroughly and have replaced all the damaged parts (especially the seals,scrapers etc.), reassemble in reverse order of disassembly little lubrication parts and seals with grease fittings.
Be careful not to overdo the tightening of the 4 tie rods, to avoid damage.

5 TROUBLESHOOTING

5.1 Problems and solutions

The search for defects in the operation should be performed only by personnel qualified respecting the safety rules in force.

PROBLEM	POSSIBLE CAUSE	SOLUTION
The lubricant does not come out	The valve does not receive the command	Check the control (solenoid) of valve. Perform a manual test.
	The pressure of the grease is too low or absent.	Check the pressure of the power supply fluid and possibly increase in range 20/200 bar
	The nozzle is clogged	Remove and clean the nozzle.
	The filter is dirty (if any)	Clean or replace the filter.
	A tube is bent	Check the fluid supply pipe
	Actuating pressure tire	Ensure sufficient pressure to drive (5-7 bar)
	The lubricant has a viscosity too high	The valves can DAV 300 and DAV 400 dispense lubricant viscosity max. 1,000,000 m Pa s and NLGI 3
Lubricant leakage retired	Molded seals or gaskets	Replace the damaged needle or needle shaped

6 BREAKDOWN AND DIMENSIONS

6.1 Overall dimensions DAV 300 and DAV 400

The search for possible malfunctions must only be performed by qualified personnel in compliance with the relevant safety regulations.

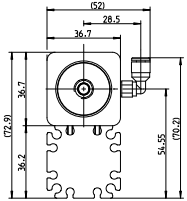

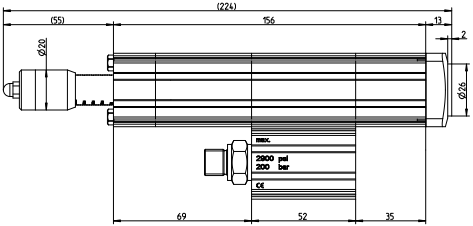

6.2 Breakdown

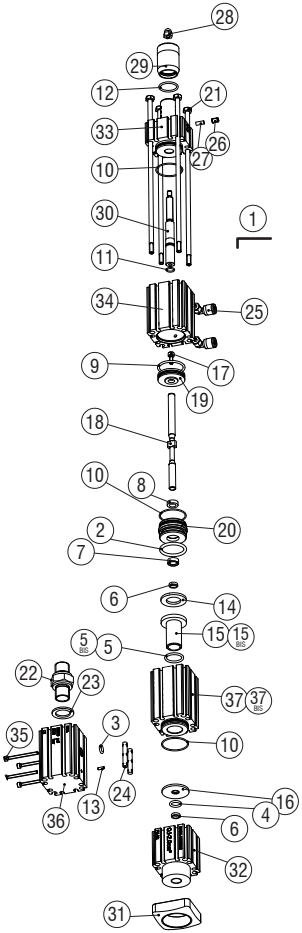

6.3 Components

RIF.	CODICE	DESCRIZIONE	Q.TÀ
1	3234403	FIXING KEY	1
2	0005121	O - RING	1
3	8221400	O - RING	1
4	8223200	O - RING	1
5	8227302	O - RING DAV 300	1
5 BIS	0001590	O - RING DAV 400	1
6	8223201	VARISEAL	2
7	8331100	UPPER LIP SEAL	1
8	8365000	LOWER LIP SEAL	1
9	0001590	O - RING	1
10	8232100	O - RING	3
11	8222500	O - RING	1
12	8227700	O - RING	1
13	8460002	PIN	1
14	0001528	MAGNET RING	1
15	0001584	VOLUMETRIC CHAMBER DAV 300	1
15 BIS	0001583	VOLUMETRIC CHAMBER DAV 400	1
16	0005384	WASHER	1
17	8424105	SCREW	1
18	0001586	NEEDLE	1
19	0001591	PNEUMATIC PISTON	1
20	0005113	BUSH	1
21	0005147	SCREW	4
22	0004850	INLET NIPPLEX	1
23	8259500	SHAPED GASKET	1
24	0002213	FIXING NUT	2
25	8634201	AIR FITTING	2
26	8512700	GRUB SCREW	1
27	0001589	PIN	1
28	8411000	NUT	1
29	0001588	MICROMETRIC REGULATION	1
30	0001587	STOPPER	1
31	0005068	FRONTAL PLATE DAV-300-400	1
32	0004922	FRONTAL BODY	1
33	0004918	BODY REGULATION	1
34	0004919	PNEUMATIC BODY	1
35	0001593	SCREW	4
36	0004923	CONNECTION BODY	1
37	0004921	MID BODY DAV-300	1
37 BIS	0004920	MID BODY DAV-400	1
GASKETKIT-DAV300400		GASKET KIT COMPLETE	

Declaration of Incorporation

according to the EU Machinery Directive 2006/42/EG, Annex II, 1.B for partly completed machinery

Manufacturer:

DAV Tech Srl

Via Ravizza, 30 - 36075 Montecchio Maggiore

VICENZA - ITALY

Person residing within the Community authorised to compile the relevant technical documentation:

Andrea Grazioli

DAV Tech Srl

Via Ravizza, 30 - 36075 Montecchio Maggiore

VICENZA - ITALY

Description and identification of the partly completed machinery:

Type: Volumetric valves

Model: DAV 100, DAV 200, DAV 300, DAV 400, DAV 100 MAN, DAV 200 MAN, DAV 300 MAN, DAV 400 MAN.

It is also declared that the relevant technical documentation has been compiled in accordance with part B of Annex VII.

It is expressly declared that the partly completed machinery the machinery fulfils all relevant provisions of the following EU Directives:

- 2006/42/CE
- 2006/42/EG
- 95/16/EG

The manufacturer or his authorised representative undertakes to transmit, in response to a reasoned request by the national authorities, relevant information on the partly completed machinery. This transmission takes place:

This does not affect the intellectual property rights!

Important note! The partly completed machinery may be put into service only if it was determined, where appropriate, that the machinery into which the partly completed machinery is to be installed meets the provisions of this Directive.

Andrea Grazioli